montážní návod / installation instruction

BLF808 / BLF909

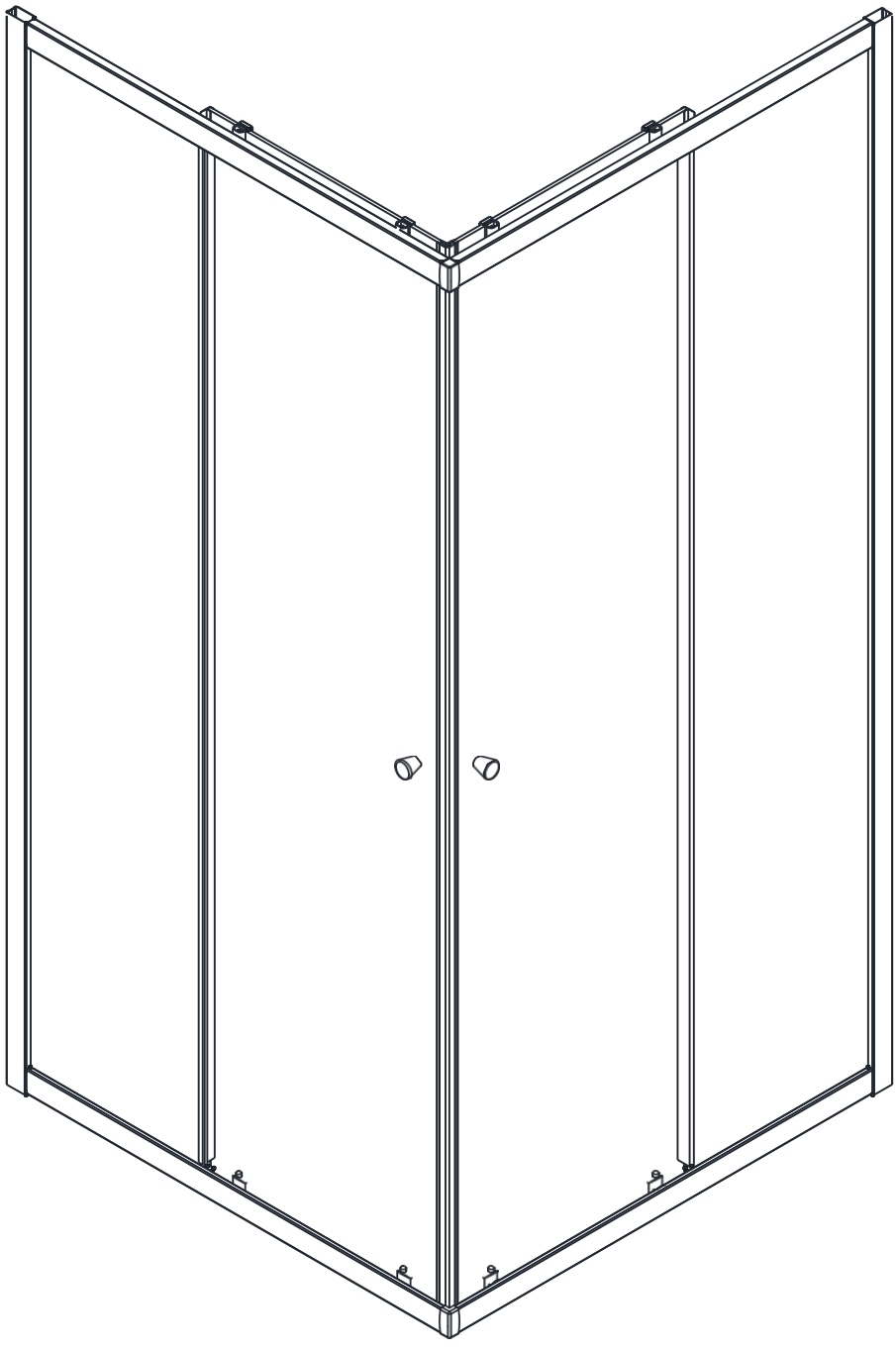

PARTS LIST

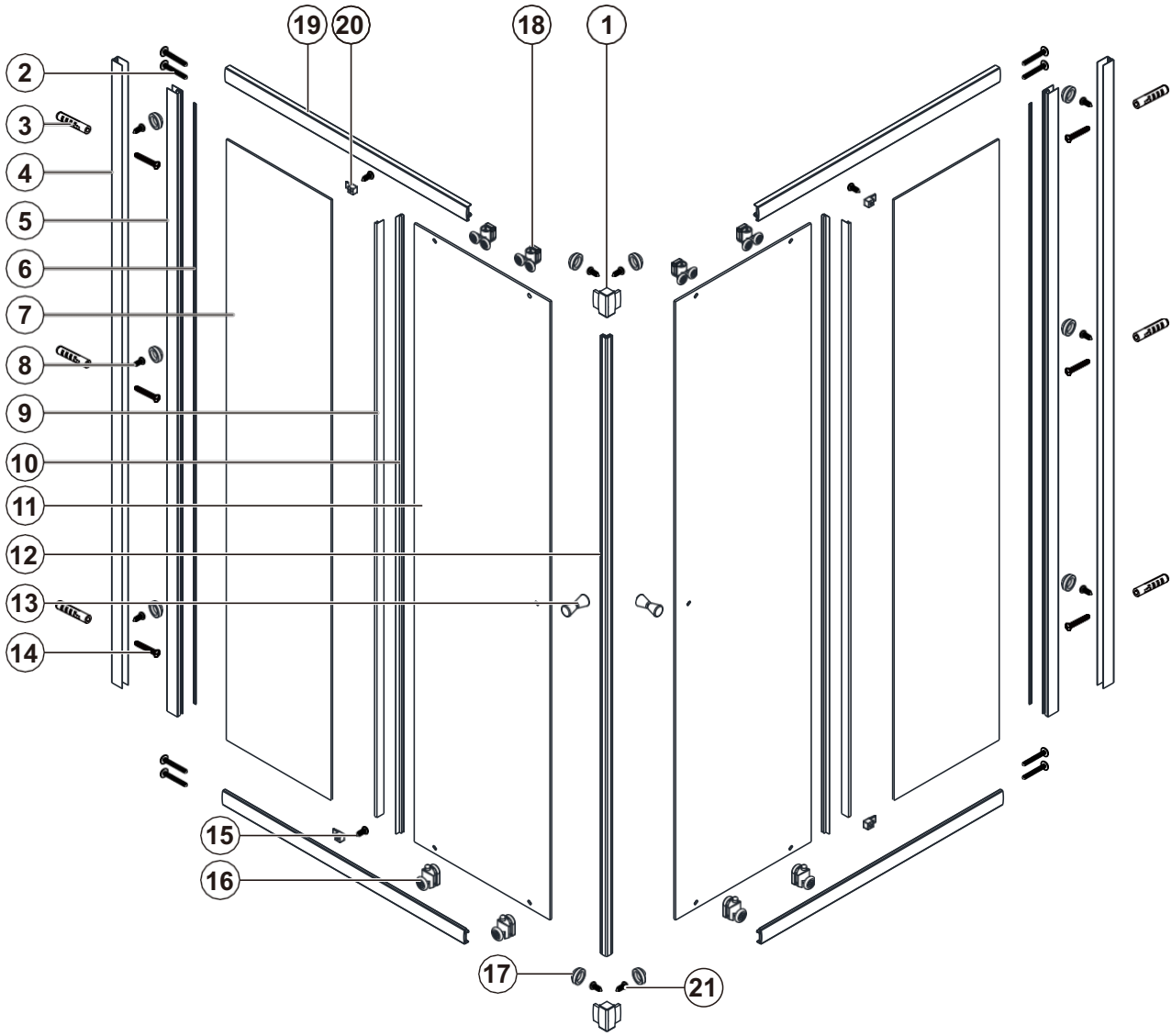

1  X2	2  ST4*30 X8	3  X6	4 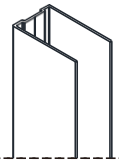 X2	5 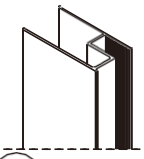 X2	6  X2
7 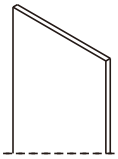 X2	8  ST4*13 X6	9 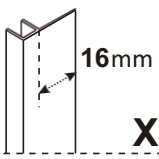 X2	10 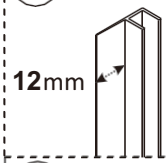 X2	11 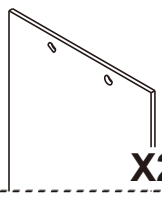 X2	12 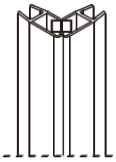 X1
13 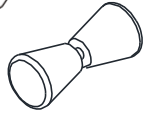 X2	14  ST4*40 X6	15  ST4*10 X4	16 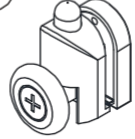 X4	17  X10	18 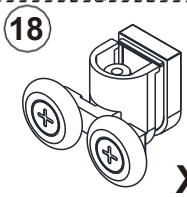 X4
19 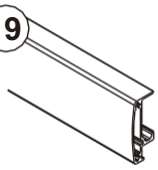 X4	20 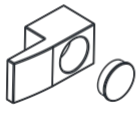 X4	21  ST4*8 X4	22  Φ3 X1		

TOOLS

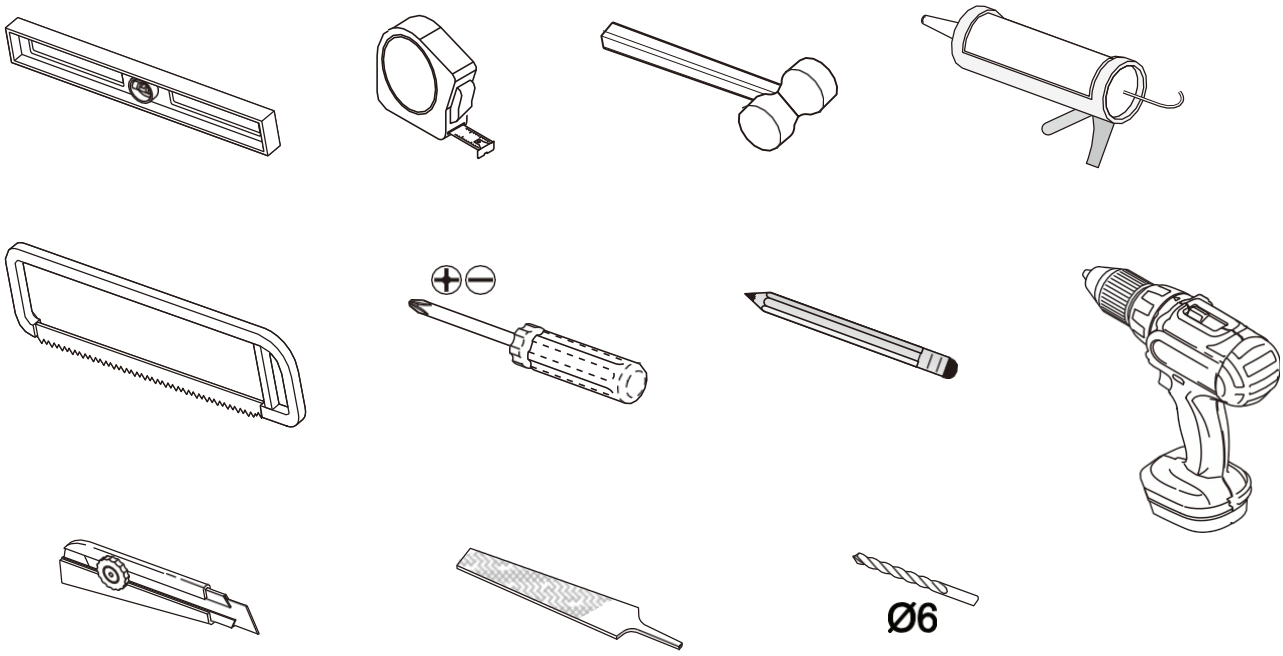

INSTALLATION

STEP 1

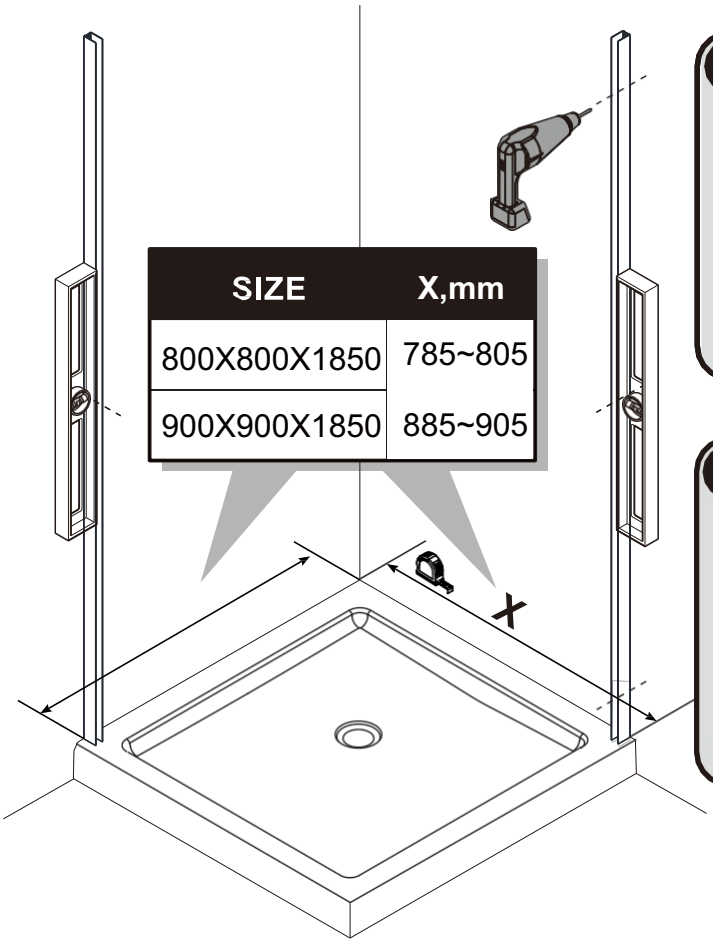

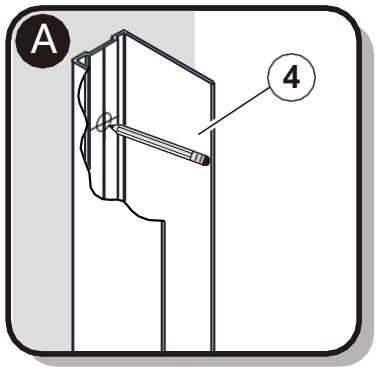

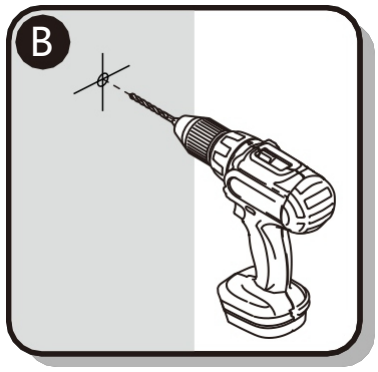

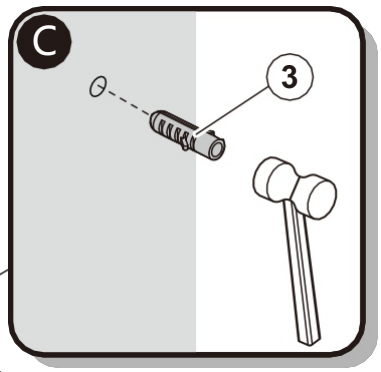

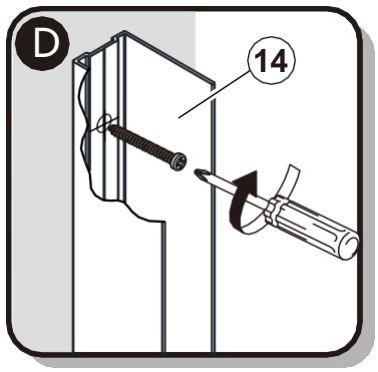

STEP 2

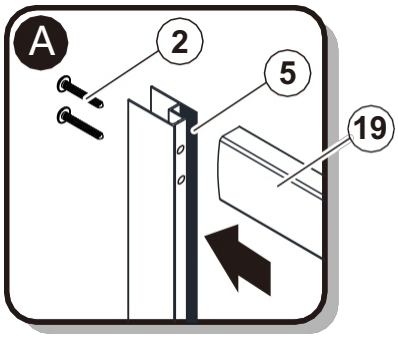

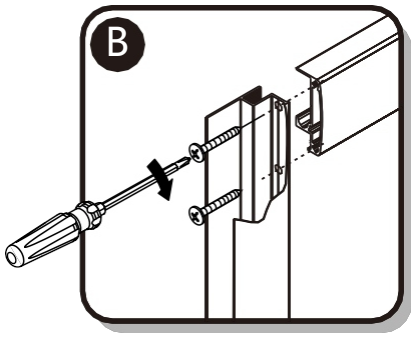

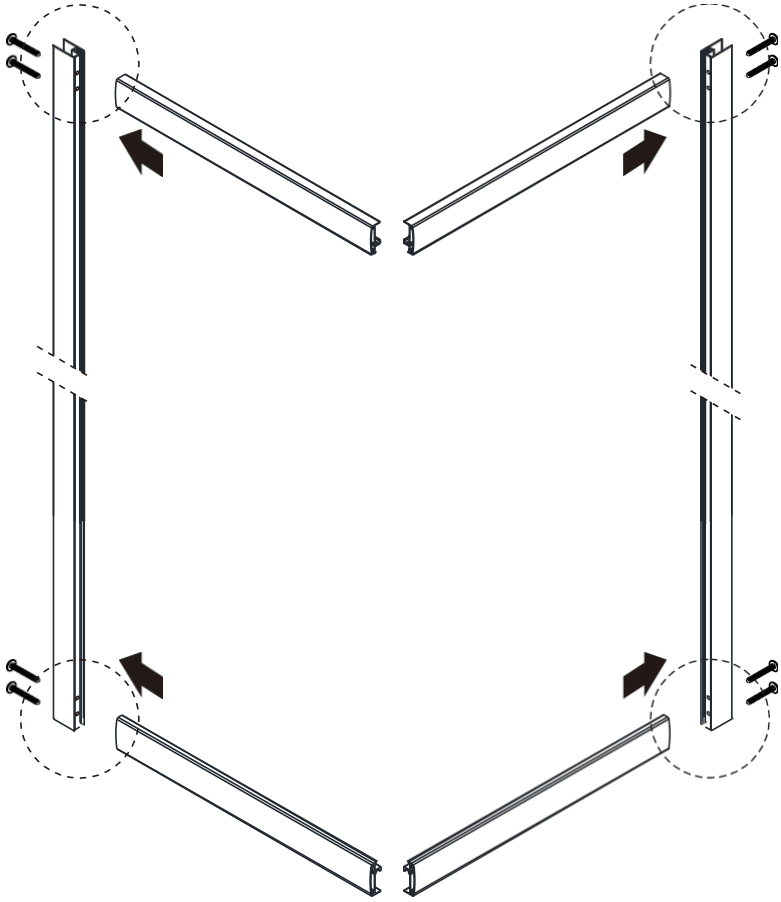

STEP 3

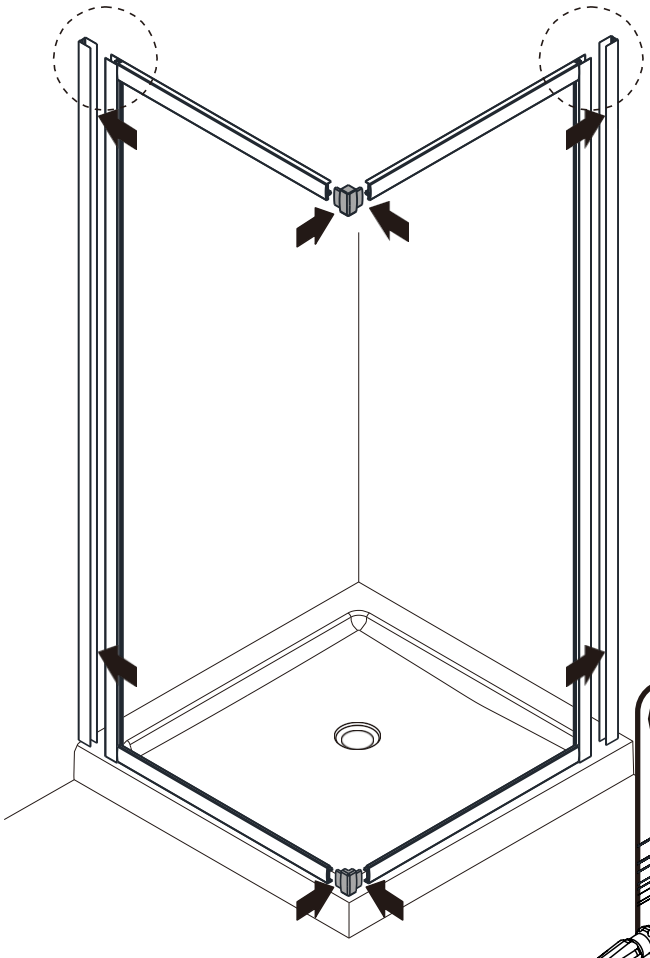

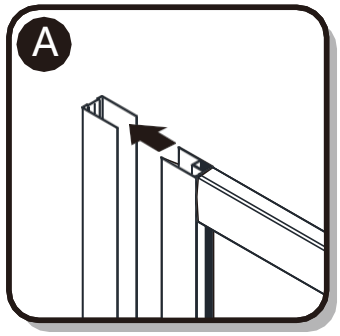

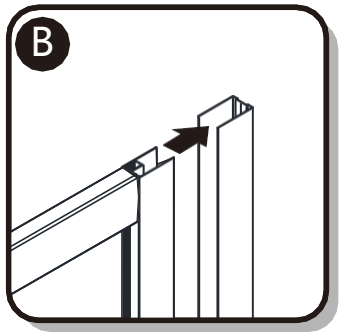

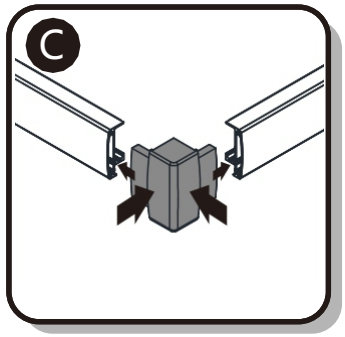

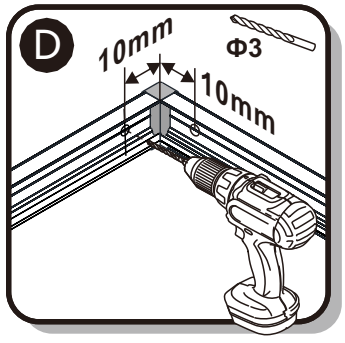

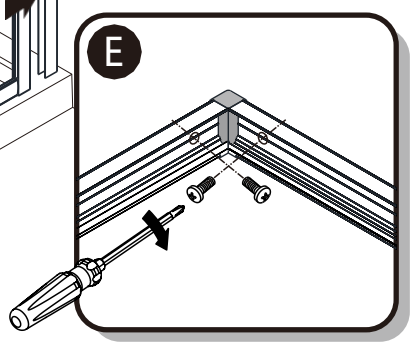

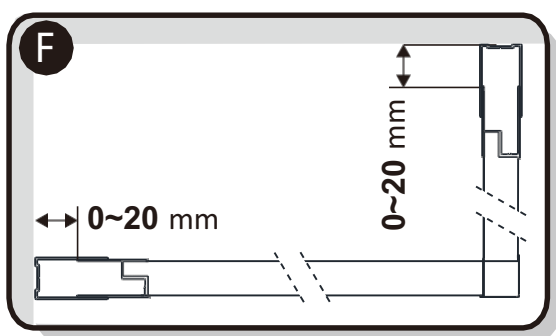

STEP 4

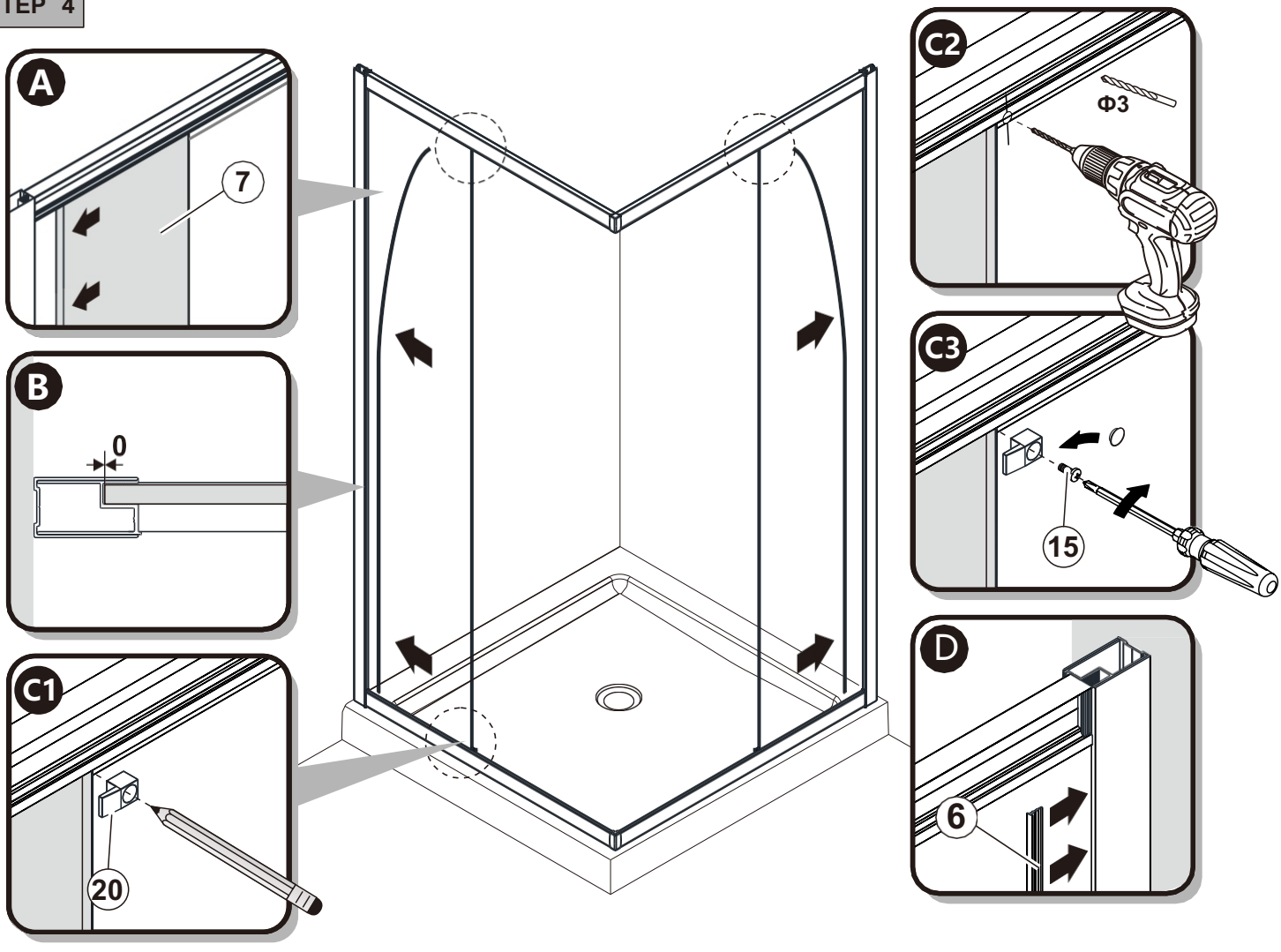

STEP 5

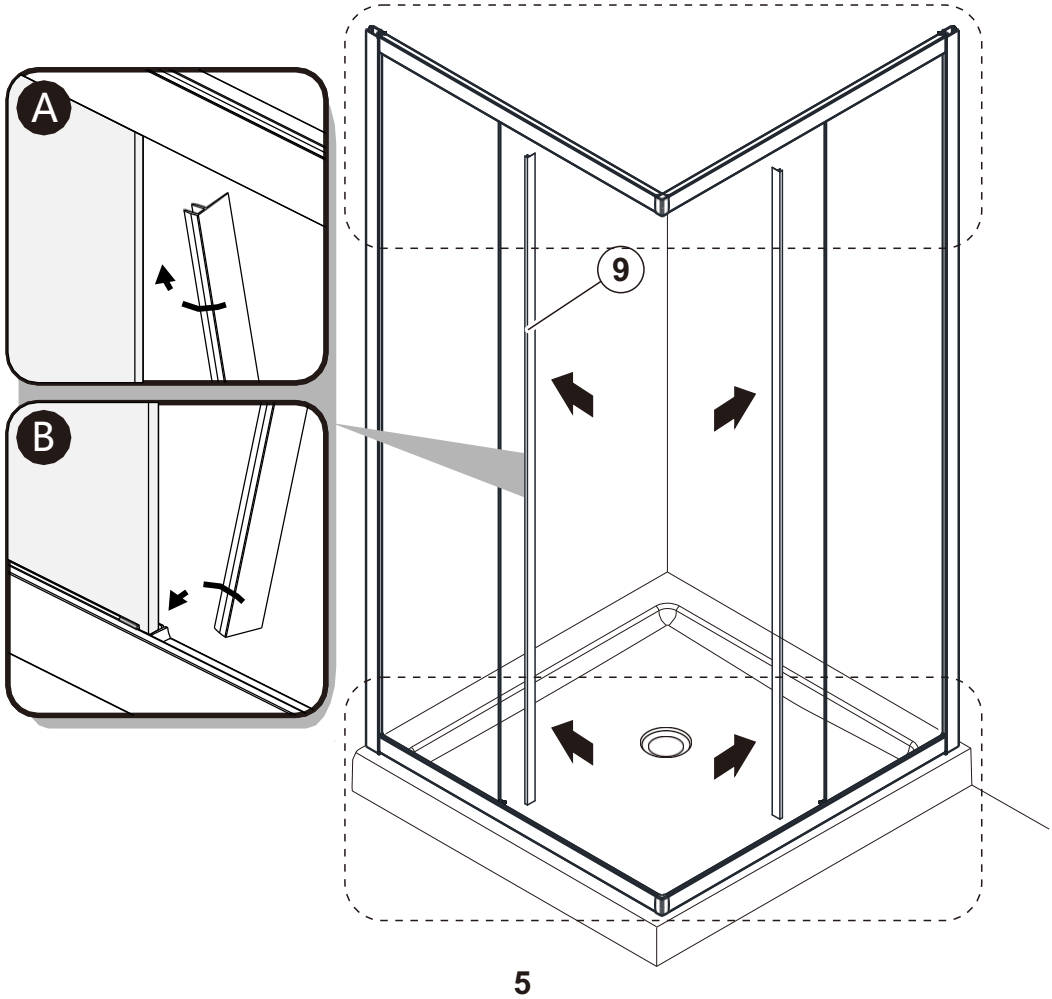

STEP 6

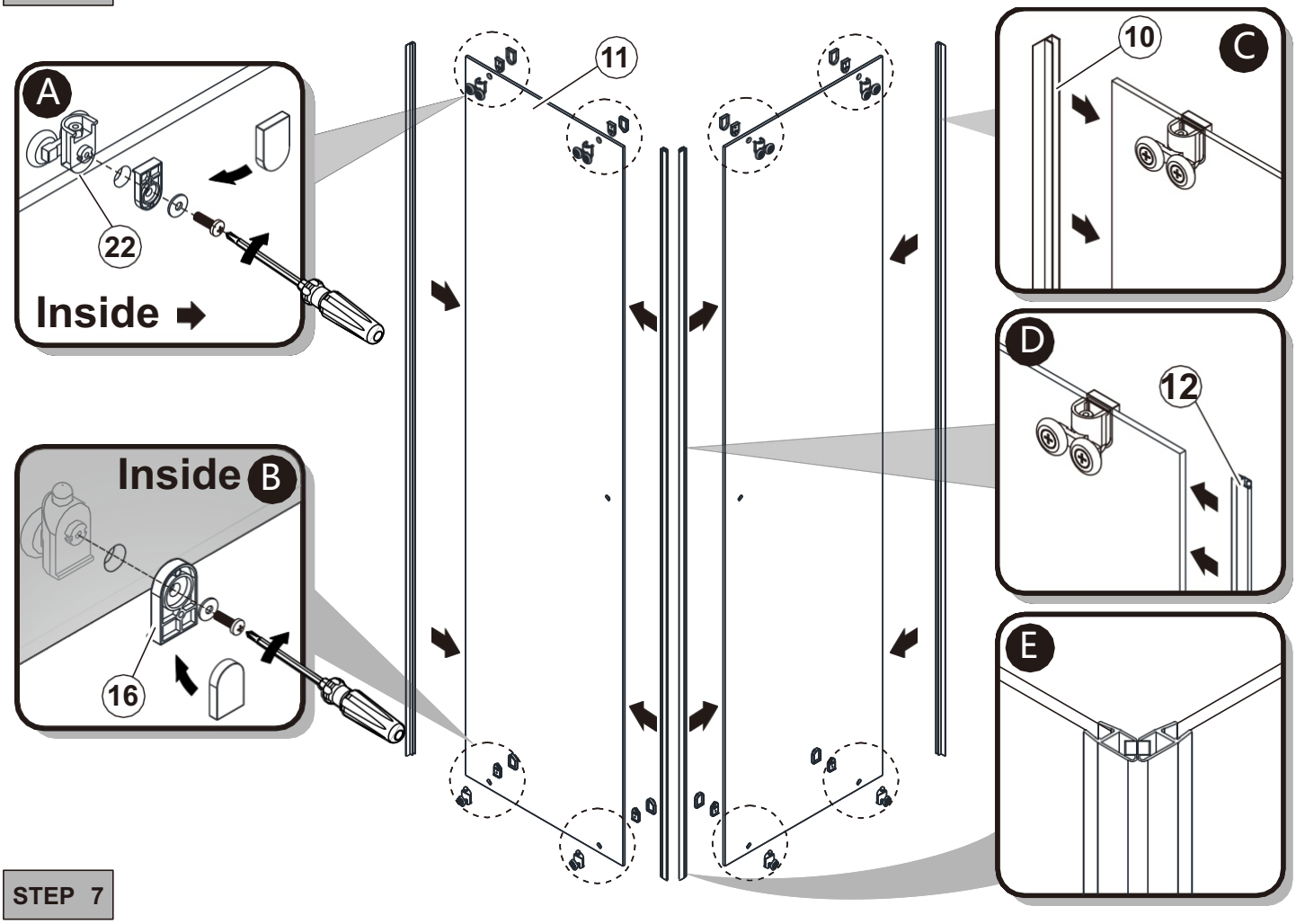

STEP 7

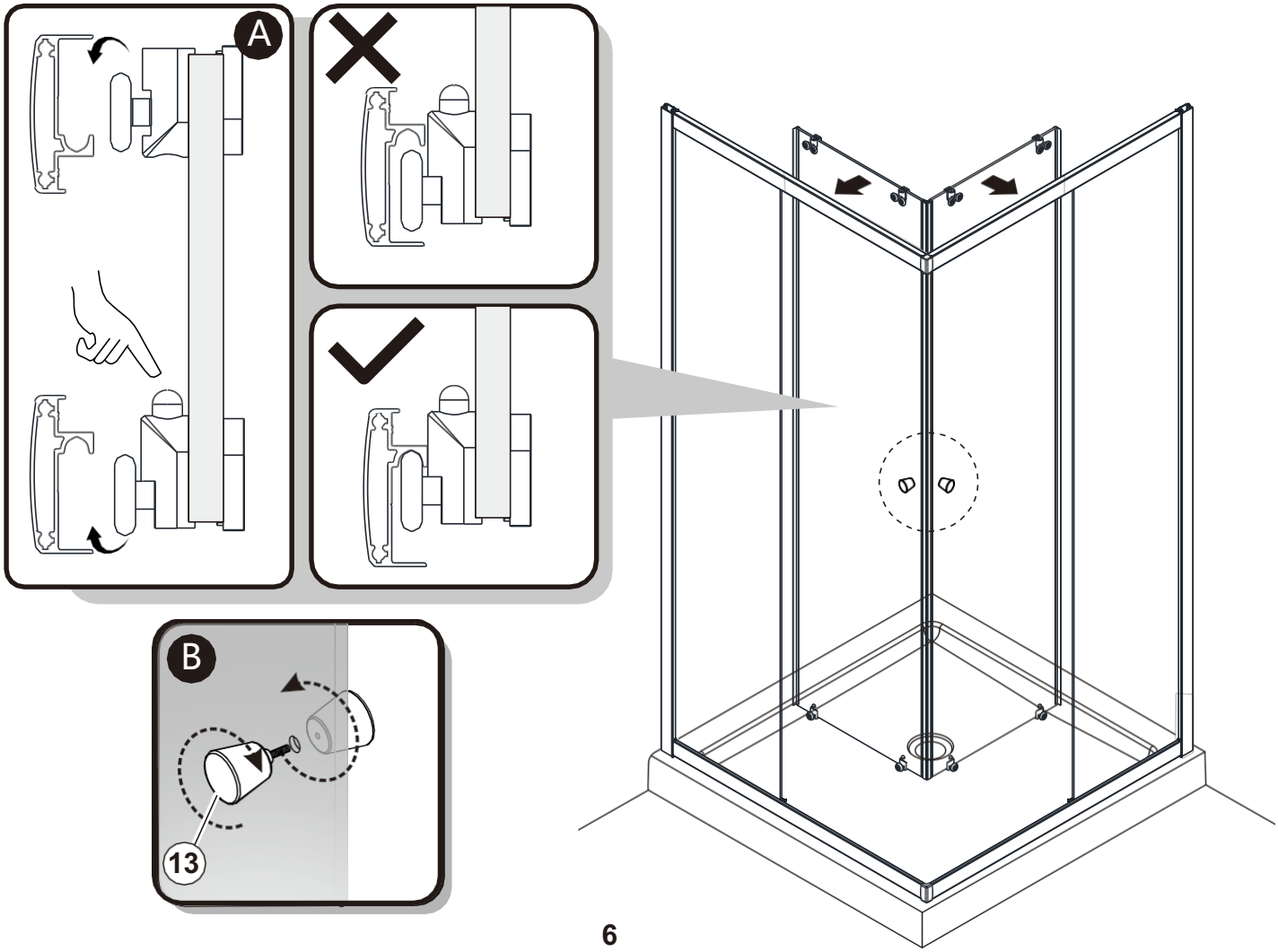

STEP 8

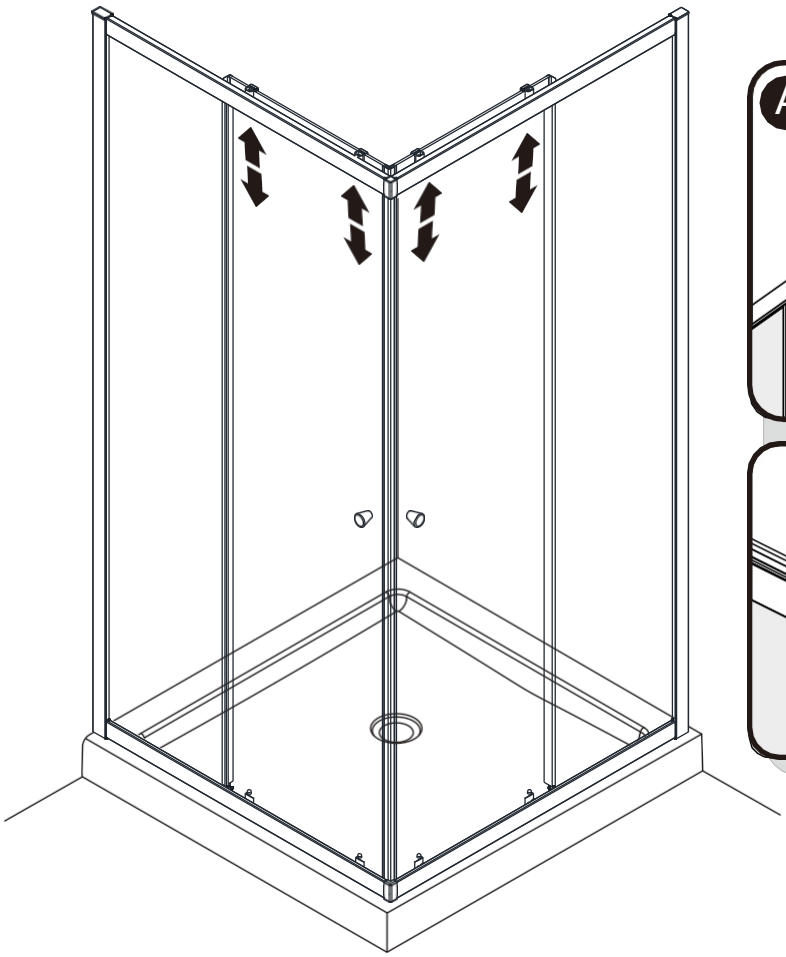

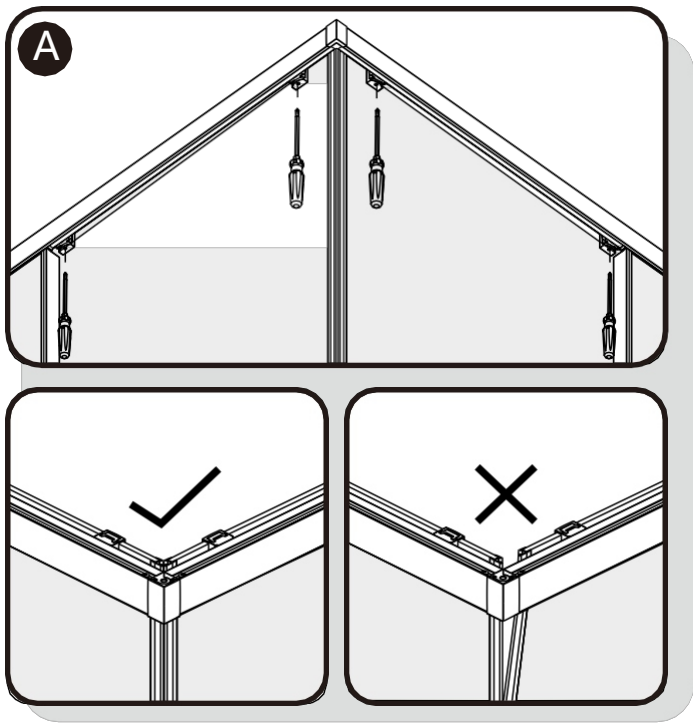

STEP 9

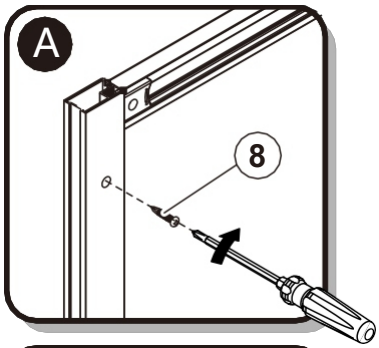

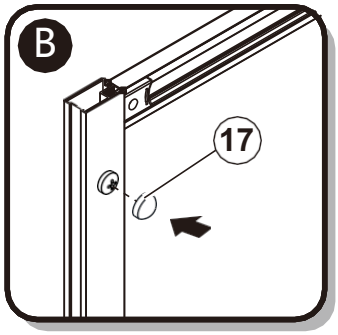

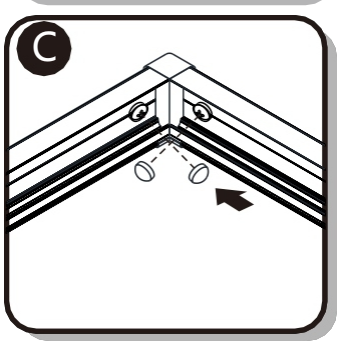

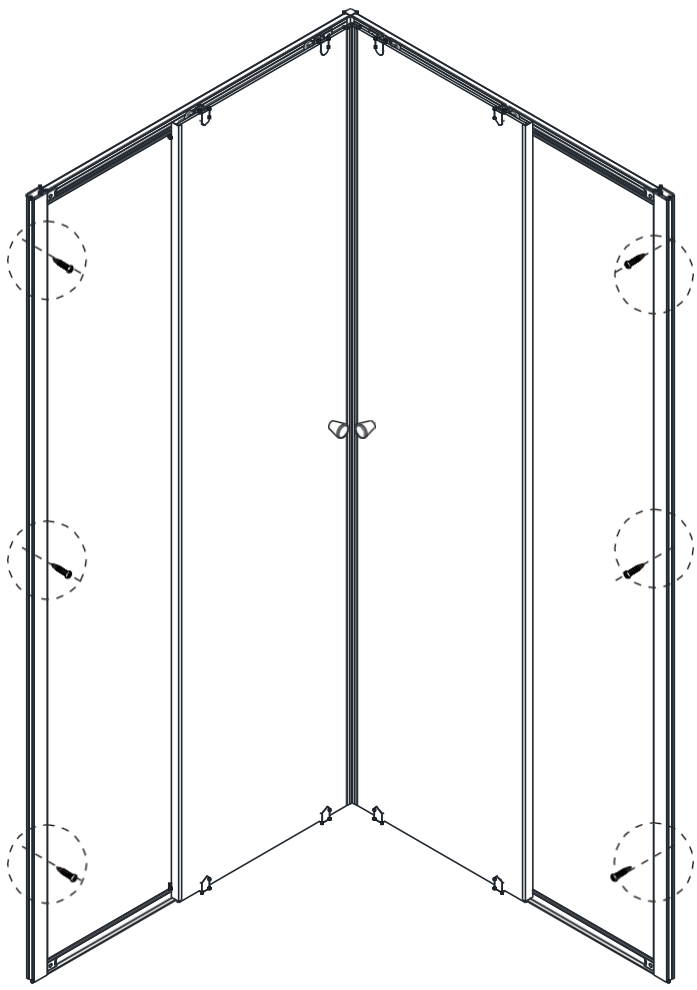

STEP 10


24 heures
hours

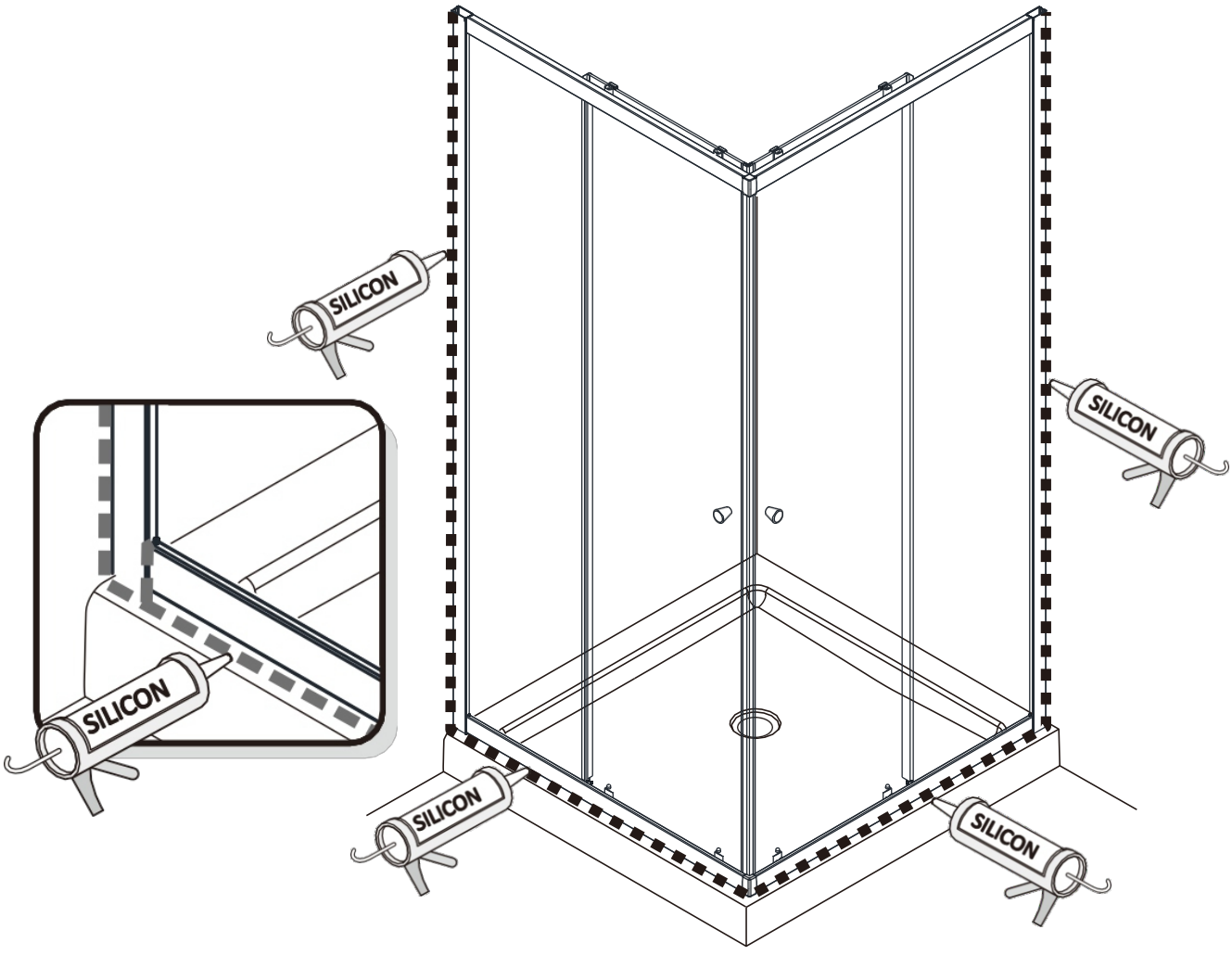
SILICON
SILICON
SILICON
SILICON
SILICON

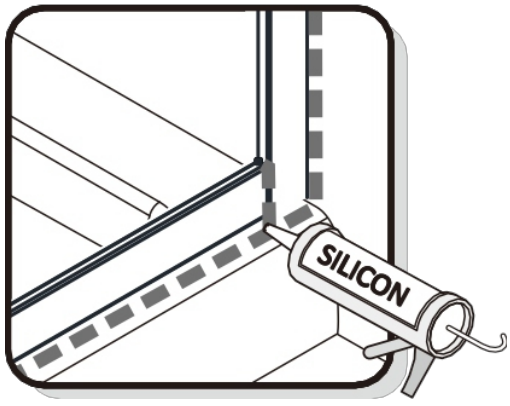
SILICON

